Service
Service
Service

Service Manual

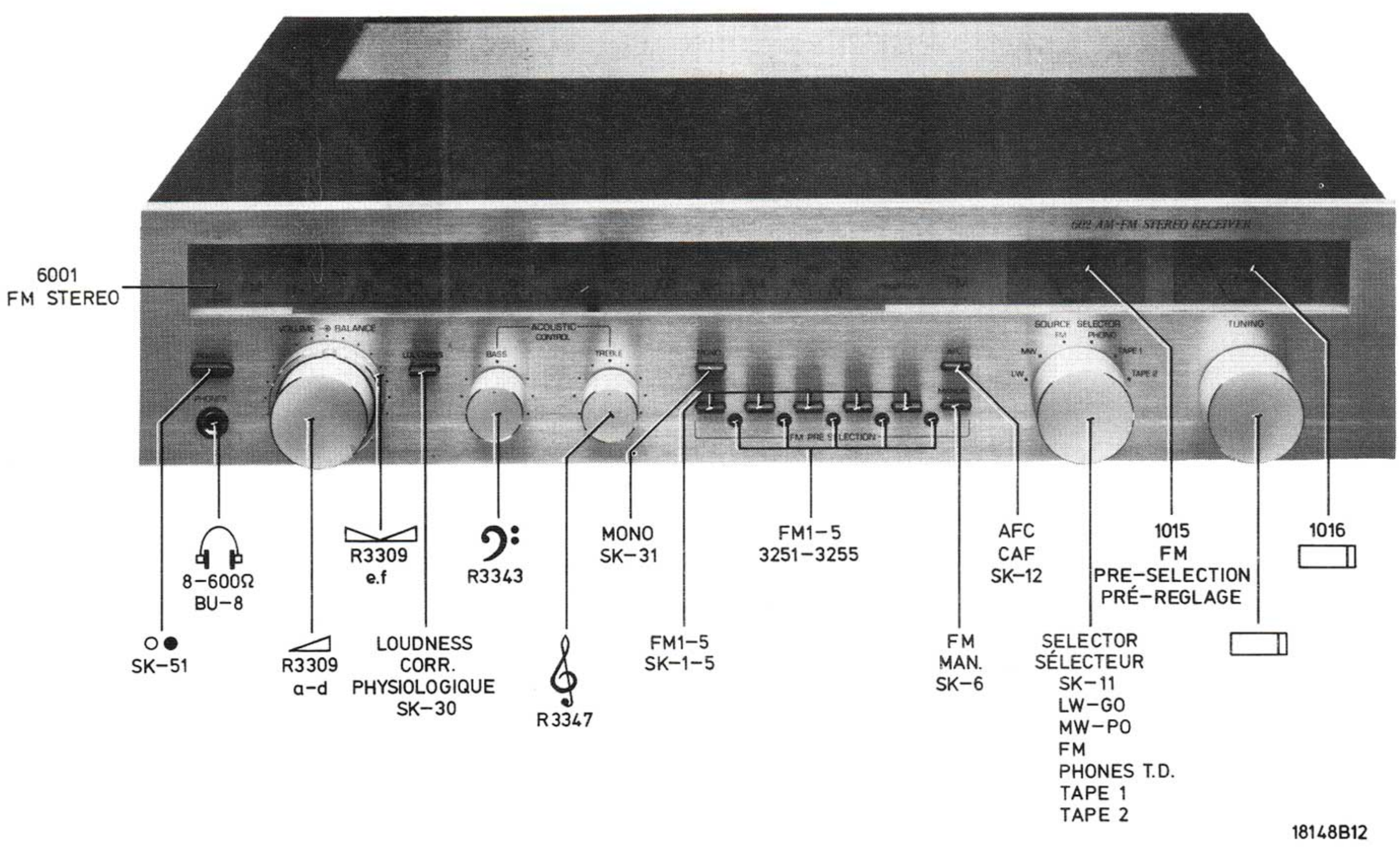

Documentation Technique Service Dokumentation Documentazione di Servizio Huolte-Ohje Manual de Servicio Manual de Serviçio

Subject to modification
4822 725 13299
Printed in The Netherlands

PHILIPS

M	6104 6105 6106 6101.6129.6108.6252.6251.6107 6102.6103 6118 6109 6112 6110.6122.6123.1015 6111 6131 1016.6124 ÷ 6127.6133 3116.6117 6522 6519.6516.6113.6520.6521.6001 1151 6128.6517 1013 1012 1011 1010 1152
S	5101 5102.5117.5118 5104 5105 5108.5119.5124 5106 5107.5120 ÷ 5123 5109 5111 5110 5115 5112 5113 3125 5114 5001
C 2001÷2170	2102 2052.2103.2113.2104 2106.2107.2101.2109 2108.2051.2110 2112.2120.2114÷2118.2122.2111.2123.2144.2124.2129 2125.2127.2126 2130.2141 2134 2131÷2133.2136÷2140 2170.2169 2152 2150 2001.2146÷2148.2153÷2156.2151 2142.2143.2145.2157÷2160.2002 2161.2162
C 2171÷2511	2185 2197 2182 2193 2195 2194 2195.2186 2190.2191.2192.2198÷2202 2180 2188 2203 2205.2206 171.2301.2772 2509.2511 2515 2513.2514 2178.2179 2175 2176.2177
R3001÷3204	3101÷3103.3111.3112.3108.3104.3200.3110.3105÷3107.3109.3113÷3116.3051.3152 3118÷3124 3131.3130.3147÷3151 3125÷3128 3143 3135 3129 3132÷3134 3136÷3141.3183.3154÷3169 3170 3158 3172 3157 3171.3179 3180 3155 3156.3182.3153.3181 3173.3174.3177.3178 3201÷3204 3531÷3533 3233.3234 3231.3232 3209÷3213
R3205÷3525	3215.3251÷3256 3237÷3264 3236.3219÷3221.3200 3205 3207 3217.3216 3225 3226÷3229 3207.3301 3525 3214 3523.3524 3539.3540 3239

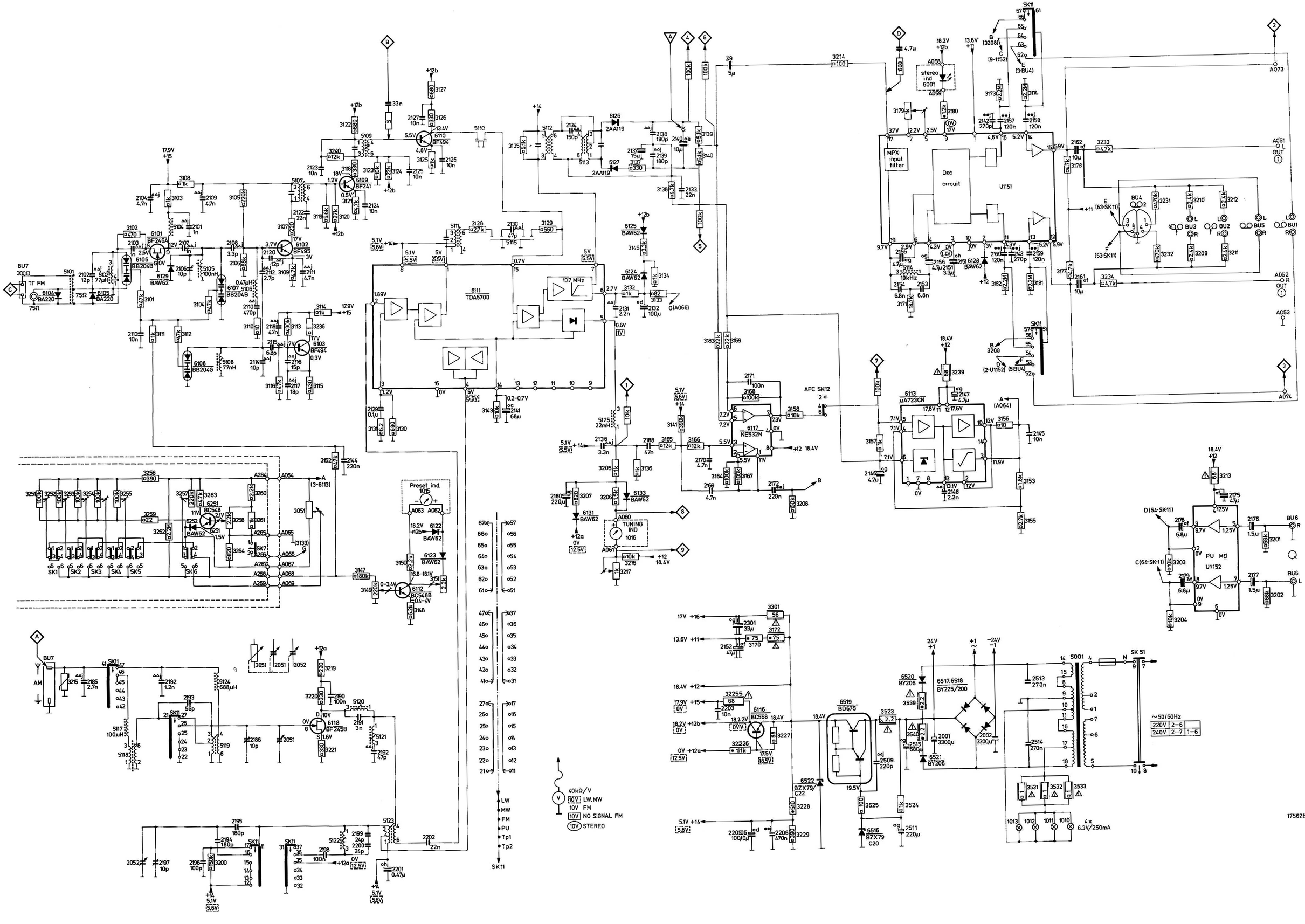

M	6427.6429.6430 6431 6411.6412.6432 6413÷6416 6435 6421.6422.6417.6418.6433.6425.6434 6515.6501÷6506 1506 6507÷6510 1502.1503
C	2411.2412 2430 2413÷2422.2431 2423 2424 2433.2434 2431.2 2510 2505.2506.2501.2502 2503.2504
R	3463.3432.3431.3461.3465.3411÷3424.3460.3456 3455.3425÷3430.3436÷3444.3457.3459.3410.3409.3462 3445÷3448.3464 3527÷3530 3520.3521.3501÷3508.3541÷3544.3509.3510 3511÷3514 3535÷3538

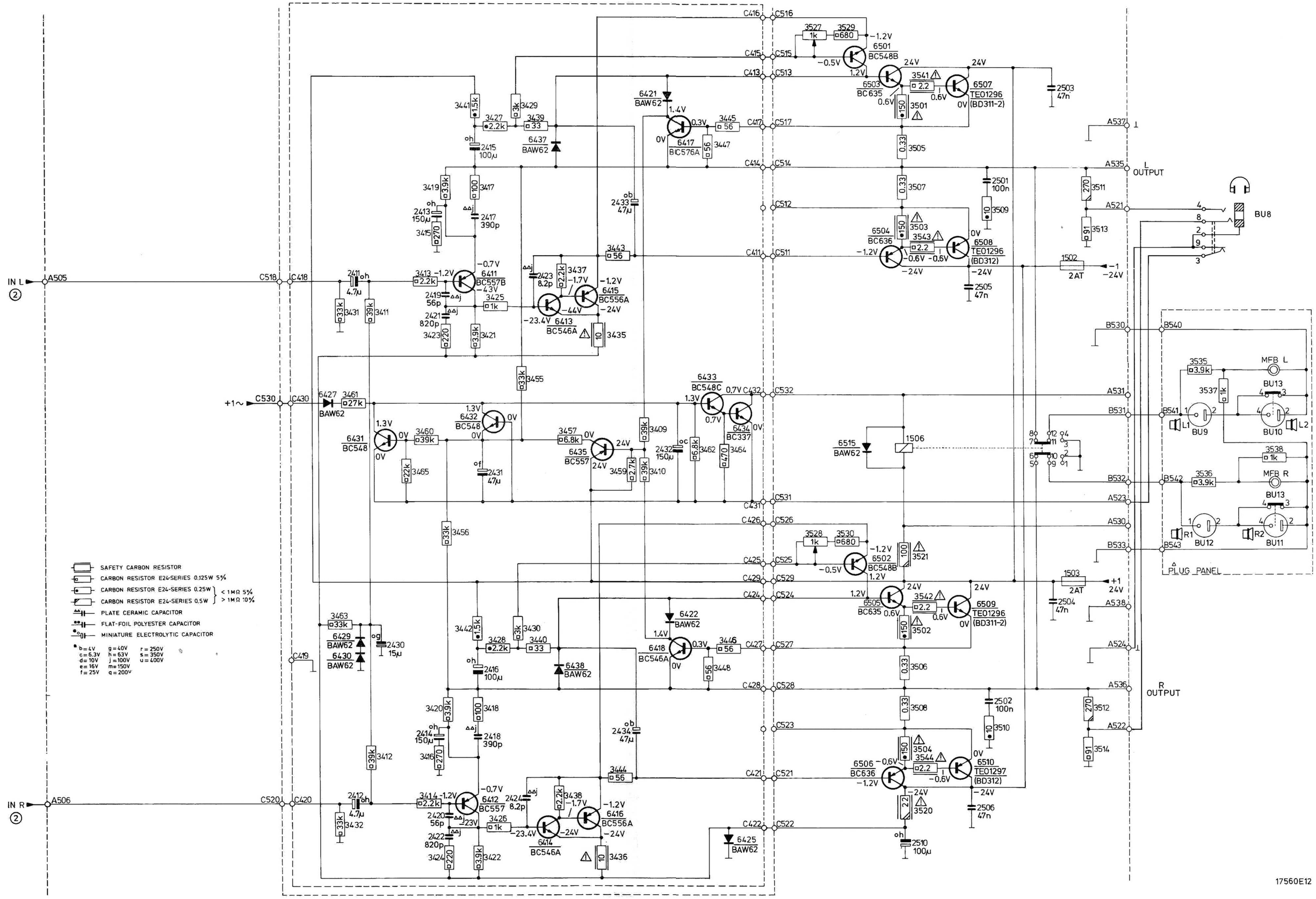

		6301.6302	6305.6304			6305÷6308	
2303÷2306	2307÷2310	2311÷2316	2317÷2320	2321÷2424	2327÷2330	2333.2334	
3303÷3309	3315÷2320	3321÷3326	3329÷3332	3345÷3347.3333÷3340.3341÷3345	3351÷3356	3357÷3362	

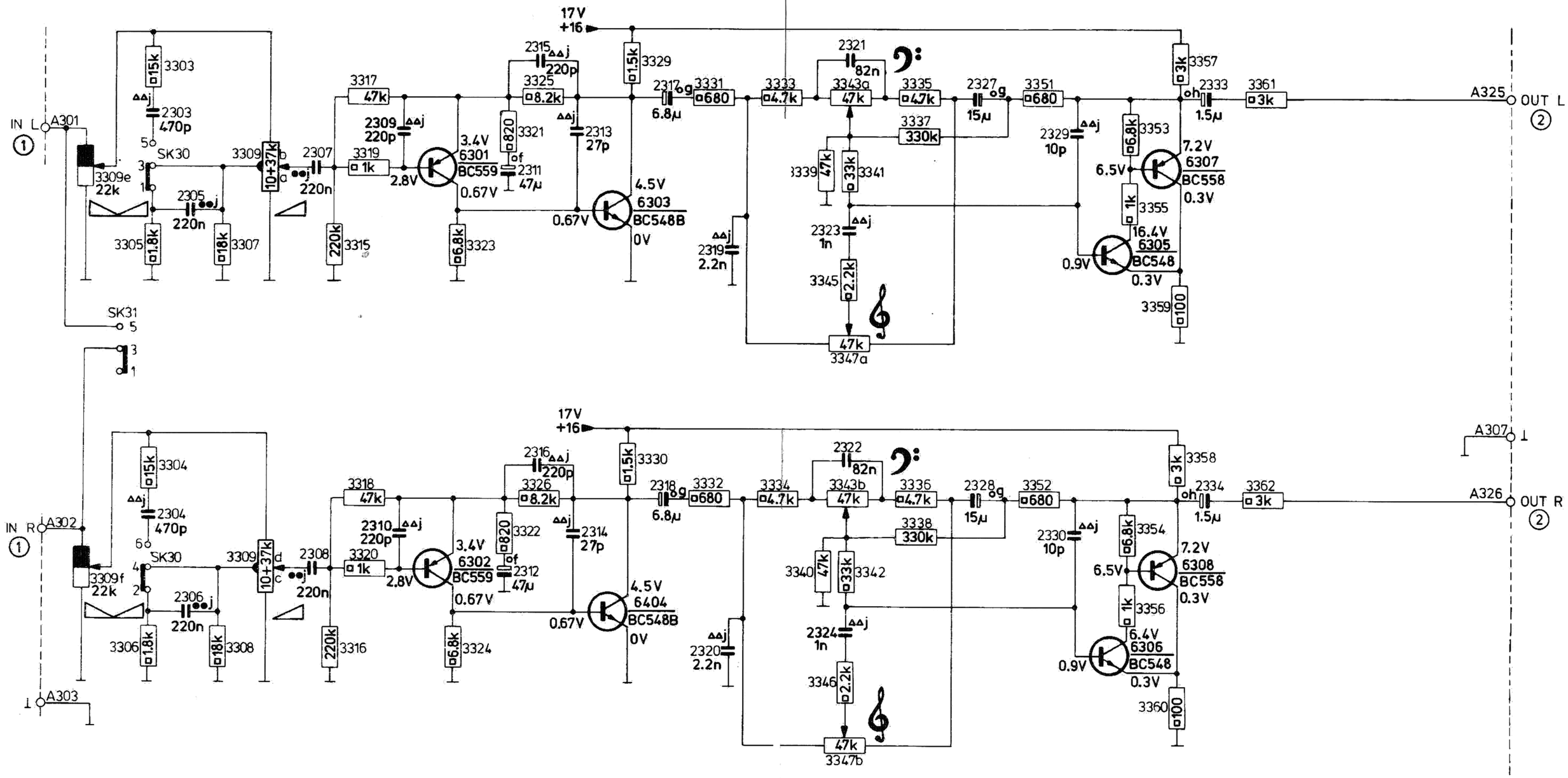

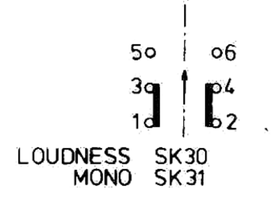

MISC	6301. SK 30	6302.6303	6304	6308	6306	6307	6305	SK 31
C	2305 2303	2312.2319.2310.2322	2320.2321	2328.2327.2324	2329.2323			
C	2307 2304.2308.2309.2306.2311 2315 2313 2314 2316 ··· 2318 2330 2334 2301.2333							
R	3309 3303.3307.3305.3308.3306 3331 ··· 3334.3343.3335.3337 ··· 3342 3336.3346.3347.3351.3355.3345.3359							
R	3315 3304 3323 3316 ··· 3321.3325.3329.3324.3322.3326.3330.3352.3360.3356 ··· 3358.3354.3301.3362.3353.3361							